Slewing Drive Performance Parameters		
Rated Output Speed	<2.5rpm	
Output Torque	24.4 kN.m	$18x10^3$ lbf.ft
Tilting Moment	135.6 kN.m	$100x10^3$ lbf.ft
Holding Torque	144.6 kN.m	$106.7x10^3$ lbf.ft
Static Axial Load Rating	970 kN	$218.3x10^3$ lbf
Static Radial Load Rating	390 kN	$87.8x10^3$ lbf
Gear Ratio	102:1	
Precision	≤0.17°	

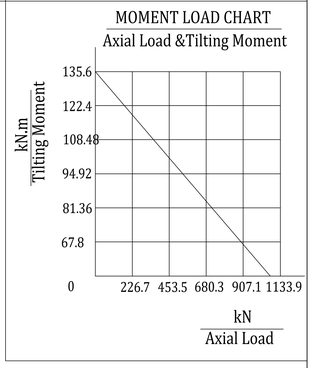

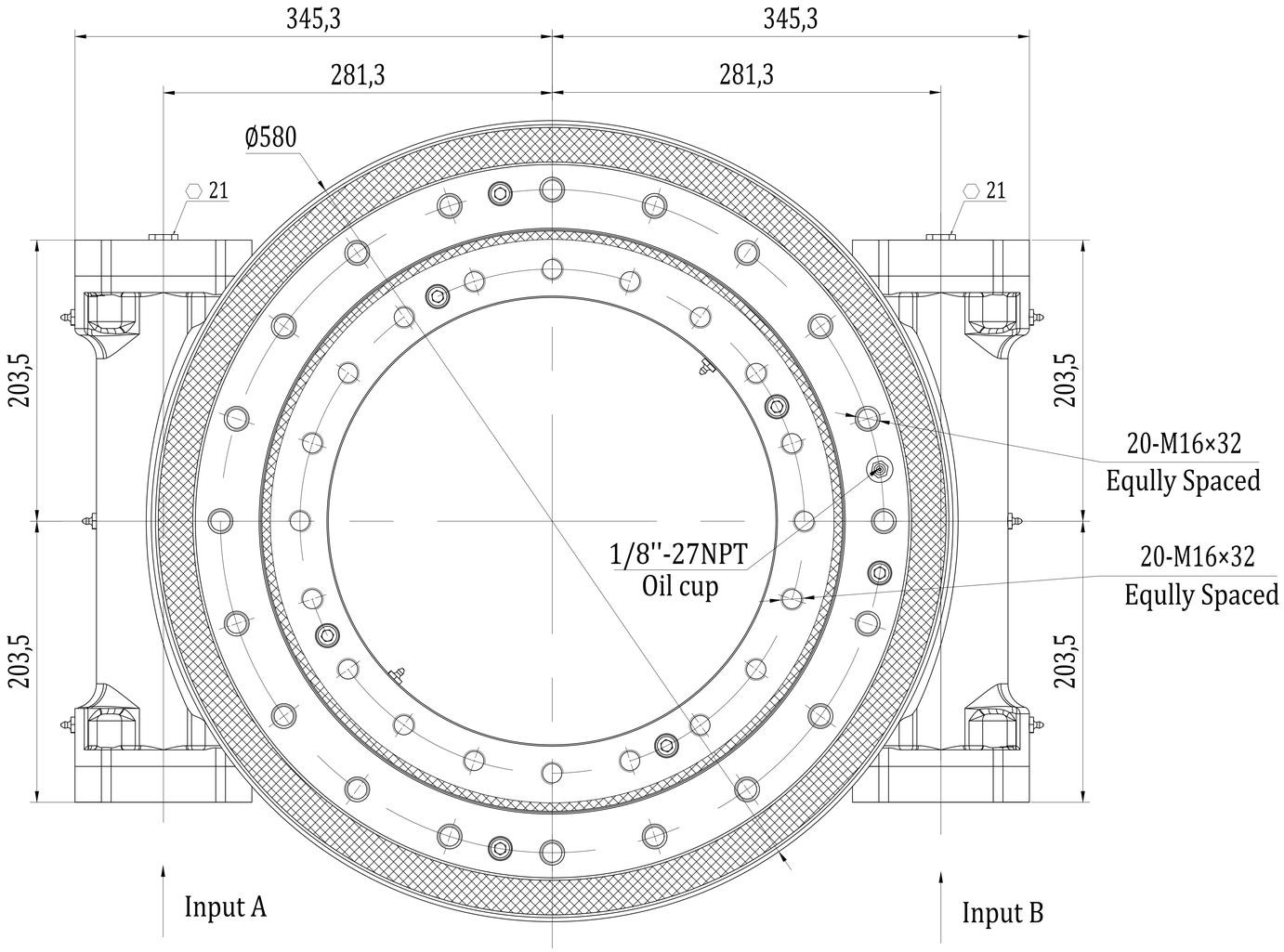

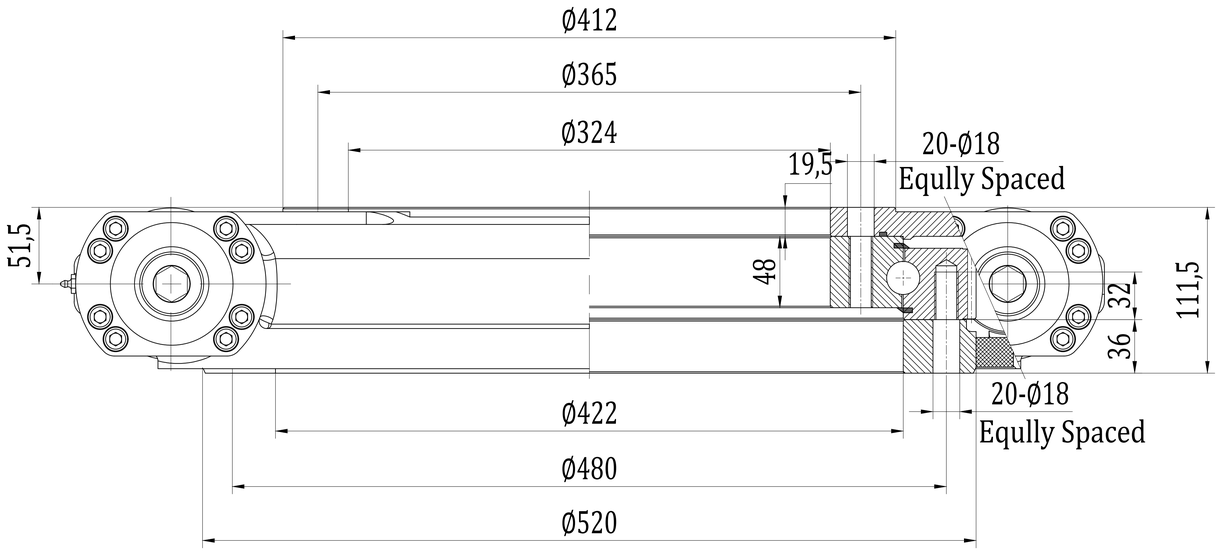

Input A B

Ø25 Hole

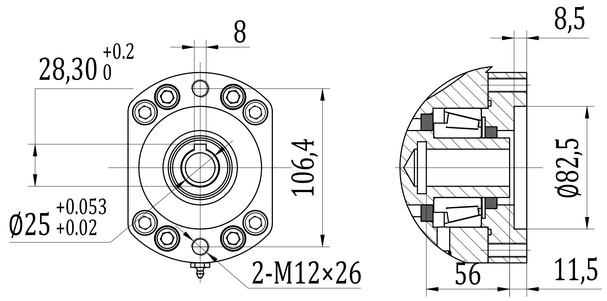

REV	DATE	REVISER	REVISER
DESIGNED BY	2021/8/24	Li Ming	www.coresundrive.com
CHECKED BY	2021/8/24	Rui Wang	Coresun Drive Equipment Changzhou Co., Ltd.
APPROVED BY	2021/8/24	Shane Zhang	

ALL PROPRIETARY RIGHTS IN THE SUBJECT MATTER HERE OF ARE RESERVED, AND NO PERMISSION IS GRANTED OR TO DISCLOSE REPRODUCE THIS PRINT IN WHOLE OR IN PART, ANY OF THE INFORMATION TO OTHERS.

WEIGHT	SCALE	Slewing Drive	
117 kg	1 : 4		
SIZE	A3	SC17-2-102-25RH	REV
SHEET	1 / 1		A

SYMBOLE ISO